T2Vid

T2V013 Europe3060

User Manual

Video Clips for

Testing and Optimisation of

Video Compression

TestVid

www.testvid.com

Intentionally blank

This User Manual contains full information on the video files that you/your organisation has licensed for use.

Please ensure to read the next two pages for details of how these video clips may be used, within the terms of the License Agreement

To find particular video clips that contain specific features/subjects that you wish to test for, it is recommended that you use the PDF version of this manual as this allows fast electronic searching for specific clip features using the "CF-words" (see section 5.2 for more information).

T2V013_Europe3060 User manual v1.0

TestVid Ltd., 4 Cheyne Road, Bristol BS9 2DH, United Kingdom
www.testvid.com sales@testvid.com Tel.: +44 (0)117 949 6411

TestVid Content License Agreement

This Content License Agreement (this "Agreement") governs the terms by which you ("You" or "Your") obtain the right to use video files, music files, sound effects files, creative art, 3-D animations, computer animations, motion backgrounds, camera acquired video footage, photos, flash files, project files, music files, data files and other material (collectively referred to as " Content") supplied by TestVid Ltd ('TestVid'). This Agreement is in addition to the TestVid Terms and Conditions of Sale ("Terms and Conditions") which are incorporated herein by reference and to which You will be contractually bound upon Your first use of the Content. In the event of any inconsistency between this Agreement and the Terms and Conditions, this Agreement shall govern. Any capitalized term that is not defined in this Agreement shall have the same meaning as set out in the Terms and Conditions.

GENERAL INFORMATION REGARDING THIS AGREEMENT

USE OF ANY OF THE TESTVID CONTENT INDICATES FULL AGREEMENT TO THE TERMS OF THIS AGREEMENT, EITHER FOR YOURSELF OR ON BEHALF OF YOUR COMPANY OR EMPLOYER (WHETHER ACTING AS AN EMPLOYEE, CONTRACTOR, SUB-CONTRACTOR, CONSULTANT OR IN ANY OTHER CAPACITY), AND AGREE TO BE BOUND BY ITS TERMS. IF YOU ARE ACCEPTING ON BEHALF OF YOUR COMPANY OR EMPLOYER, YOU REPRESENT AND WARRANT THAT YOU HAVE FULL LEGAL AUTHORITY TO BIND YOUR COMPANY OR EMPLOYER. IF YOU DO NOT HAVE SUCH AUTHORITY OR YOU DO NOT ACCEPT OR AGREE WITH THESE TERMS, DO NOT USE THE CONTENT.

LICENSE TERMS

Upon Your acceptance of this Agreement and receipt of payment from You by TestVid, TestVid grants to You a perpetual, non-exclusive, non-transferable license to use the Content for the Permitted Uses (as outlined below). The use contemplated by You must be a Permitted Use. If it is not, it is prohibited by this Agreement. All other rights in and to the Content, including, without limitation, all copyright and other intellectual property rights relating to the Content, are retained by TestVid.

Content is Licensed (not sold)

Your use of the Content is under license only. No title or intellectual property rights are granted to You. Ownership of the Content and all copyright and all other rights not expressly granted by this Agreement remains with TestVid.

Permitted Uses for the Content

Subject to the restrictions described under **Content License Restrictions & Prohibited Uses** below the following are "Permitted Uses" of the Content:

1. testing, development, engineering and related activities including product demonstrations and tests;
2. on-line or electronic presentations, catalogues, brochures, advertising and promotions including web pages, podcasts and vidcasts providing that when used for this purpose the version of the Content displayed (a) must be compressed such that any version that appears to be as good quality as the original cannot be obtained, and (b) the TestVid logo remains visible, and (c) there is a clear label denoting the TestVid copyright;
3. any other uses approved in writing, in advance by TestVid.

For clarity, You may not use the Content in products for resale, license or other distribution, unless approved in writing in advance by TestVid.

Content License Restrictions & Prohibited Uses

You may not do anything with the Content that is not expressly permitted in the preceding section or permitted by a separate modified content license which has been explicitly agreed in writing by TestVid. By way of example and not limitation, the following are "Prohibited Uses":

4. sale, resale or distribution of the Content either as a single piece of video, music file, sound effect file, composition, software project file or product or as a part of any background of these;
5. sale, resale or distribution of the Content as a part of another production where the Content, in our sole discretion, comprises 5% or more of the finished product;
6. incorporation of the Content in any product that results in a re-distribution or re-use of the Content or is otherwise made available in such a way one could extract or access or reproduce the Content as a separate file as if it were substantially unmodified;
7. sub-licensing, re-selling, renting, lending, assigning, gifting or otherwise transferring or distributing the Content or the rights granted under this Agreement;
8. removal of any notice of copyright, logo, watermark, trade-mark or other proprietary right from any place where it is on or embedded in the Content;
9. installation and use of the Content at a location/site other than for which the Content was originally licensed or placing a copy of the Content on a network server or web server for use by others at a different location/site;
10. use of the Content in a way which could be considered obscene, pornographic, immoral, infringing, dishonest, fraudulent, defamatory or libellous in nature, or that could be reasonably likely to bring any person or property reflected in the Content into disrepute;
11. use of or display of the Content in an electronic format that enables it to be downloaded or distributed as the original media file or with minor differences (as determined by TestVid) via any computer device (including mobile devices) or shared in any peer-to-peer or similar arrangement;
12. breaking the Content into smaller pieces and selling these pieces as stock or test media

Restriction on Quantity of Copies

Only You or bona-fide colleagues are permitted to use the Content, although You may transfer the Content or files containing the Content or Permitted Derivative Works to Your company's servers, for the purpose of reproduction for Permitted Uses, provided that such parties shall have no further or additional rights to use the Content and cannot access or extract it from any file You supply.

As long as it is a Permitted Use, You may reproduce the Content or any parts thereof in original or derivative forms (e.g. compressed) a maximum of 25 times on one particular 'site' (i.e. one geographical location, as determined at the discretion of TestVid).

If You require the Content to be copied or stored more than 25 times in original or derivative form, or require the Content or any parts thereof on a different site then You must purchase additional licenses for the Content. The count of number of copies covers all versions whether stored or used on personal computers, workstations, servers, web-servers, mainframes, laptops, PDAs, mobile phones and other mobile devices, games consoles and any other type of computer. For the avoidance of doubt, if the Content is stored at a remote site this Content may only be downloaded and used at the single site for which the license was purchased.

In addition to these 25 copies You may make one (1) copy of the Content solely for back-up purposes, and You must reproduce all

proprietary notices on this single back-up copy.

Term of Agreement

This Agreement is effective until it is terminated. If You terminate this Agreement You must destroy or delete the Content and any Permitted Derivative Works, along with any copies or archives of it or accompanying materials (if applicable), and cease using the Content for any purpose. This Agreement and all of Your rights under it terminate automatically without notice if at any time You breach any of its terms. You must, if requested, confirm to TestVid in writing that You have complied with these requirements and provide any proof thereof requested by TestVid.

Amendment

This Agreement can be amended by TestVid at any time by posting an amended Agreement on TestVid's website. Your only recourse, if You are not agreeable to the amended Agreement is to terminate this Agreement and cease use of the Content. Otherwise, You will be bound by the terms of the amended Agreement.

Replacement of the Content

TestVid may revoke the license granted by this Agreement and replace the Content with a substantially similar alternative for any reason. TestVid may inform You of replacement of the Content by sending notice of same, along with the replacement Content to the address or contact information provided to TestVid by You or such other address as You may advise TestVid in writing to use. In the event of a replacement, the license for the replaced Content immediately terminates and this Agreement (or the then-current version of this Agreement) automatically applies to the replacement Content. You agree not to use the replaced Content, or any Permitted Derivative Works, for future products and to take all reasonable steps to discontinue use of the replaced Content, or any Permitted Derivative Works, in products that already exist.

Limitation of Warranties and Liability

While TestVid carefully all of the Content to ensure the highest quality, THE CONTENT IS PROVIDED "AS IS" WITHOUT REPRESENTATION, WARRANTY OR CONDITION OF ANY KIND, EITHER EXPRESS OR IMPLIED, INCLUDING, BUT NOT LIMITED TO THE IMPLIED REPRESENTATIONS, WARRANTIES OR CONDITIONS OF MERCHANTABILITY, OR FITNESS FOR A PARTICULAR PURPOSE. WE DO NOT REPRESENT OR WARRANT THAT THE CONTENT WILL MEET YOUR REQUIREMENTS OR THAT IT WILL BE ERROR FREE. THE ENTIRE RISK AS TO THE QUALITY AND PERFORMANCE OF THE CONTENT IS WITH YOU. SHOULD THE CONTENT PROVE DEFECTIVE, YOU ASSUME THE ENTIRE RISK AND COST OF ALL NECESSARY CORRECTIONS.

Our entire liability and Your exclusive remedy, with respect to any claims arising out of Your use of the Content, or out of Your actions in downloading the Content, shall be as follows: TESTVID'S MAXIMUM AGGREGATE LIABILITY UNDER THIS AGREEMENT OR IN RESPECT OF THE USE OR EXPLOITATION OF ANY OR ALL OF THE CONTENT IN ANY MANNER SHALL BE LIMITED TO THE FEES COLLECTED BY TESTVID FOR YOUR USE OF THE CONTENT THAT IS THE SUBJECT MATTER OF THE CLAIM OR $1,000 UNITED STATES DOLLARS, WHICHEVER IS GREATER. IN NO EVENT SHALL TESTVID OR ANY OF ITS DIRECTORS, OFFICERS, EMPLOYEES, SHAREHOLDERS, PARTNERS, AGENTS OR LICENSEES BE LIABLE FOR ANY INCIDENTAL, INDIRECT, PUNITIVE, EXEMPLARY, OR CONSEQUENTIAL DAMAGES WHATSOEVER (INCLUDING DAMAGES FOR LOSS OF PROFITS, INTERRUPTION, LOSS OF BUSINESS INFORMATION, OR ANY OTHER PECUNIARY LOSS) IN CONNECTION WITH ANY CLAIM, LOSS, DAMAGE, ACTION, SUIT OR OTHER PROCEEDING ARISING UNDER OR OUT OF THIS AGREEMENT, INCLUDING WITHOUT LIMITATION THE USE OF, RELIANCE UPON, ACCESS TO, OR EXPLOITATION OF THE CONTENT OR ANY PART THEREOF, OR ANY RIGHTS GRANTED TO YOU HEREUNDER, EVEN IF TESTVID HAS BEEN ADVISED OF THE POSSIBILITY OF SUCH DAMAGES, WHETHER THE ACTION IS BASED ON AGREEMENT, TORT (INCLUDING NEGLIGENCE), INFRINGEMENT OF INTELLECTUAL PROPERTY RIGHTS OR OTHERWISE. IF YOUR JURISDICTION DOES NOT ALLOW THE EXCLUSION OF IMPLIED WARRANTIES OR FOR THE LIMITATION OR EXCLUSION OF LIABILITY FOR INCIDENTAL OR CONSEQUENTIAL DAMAGES, THE LIABILITY OF TESTVID OR ANY OF ITS DIRECTORS, OFFICERS, EMPLOYEES, SHAREHOLDERS, PARTNERS OR AGENTS SHALL BE LIMITED TO THE GREATEST EXTENT PERMITTED BY LAW.

Indemnity

You agree to indemnify, defend and hold TestVid and its affiliates, and their respective directors, officers, employees, shareholders and agents (collectively, the "TestVid Parties") harmless from and against any and all claims, liability, losses, costs and expenses (including reasonable legal fees) incurred by any TestVid Party as a result of (i) any breach by You of this Agreement; (ii) any claim threatened or asserted against any TestVid Party that alleges that You have breached this Agreement or infringed any copyrights, trade secrets, trademarks, right of privacy, right of publicity or other intellectual or other property rights of any third party. TestVid reserves the right, at Your expense, to assume the exclusive defence and control of any matter otherwise subject to indemnification by You, and You agree to cooperate with TestVid's defence of such claim.

General Provisions

You acknowledge and agree that this Agreement will be governed under the laws of the United Kingdom (without reference to conflicts of laws principles). You hereby irrevocably submit to the jurisdiction of the Courts of the United Kingdom. If TestVid is obligated to go to court or arbitration to enforce any of its rights, or to collect any fees, You agree to reimburse TestVid for its legal fees, costs and disbursements if TestVid is successful. You consent to service of any required notice or process upon You by registered mail or overnight courier with proof of delivery notice, addressed to the address or contact information provided by You at the time You first purchase usage rights to the Content. You agree to waive any right You may have to trial by jury. TestVid's failure to insist upon or enforce strict performance of any provision of this Agreement shall not constitute a waiver. This Agreement is not assignable by You without TestVid's prior written consent (such consent not to be unreasonably withheld). TestVid may assign this Agreement without Your consent to any other party so long as such party agrees to be bound by its terms. This Agreement may be amended by TestVid at any time by posting an amended Agreement on the TestVid website. Continued use of the Content or failure to terminate this Agreement after posting of such amendment will be deemed to be acceptance of the amendment.

YOU ACKNOWLEDGE THAT YOU HAVE READ THIS AGREEMENT AND HAVE HAD OPPORTUNITY TO SEEK INDEPENDENT LEGAL ADVICE PRIOR TO AGREEING TO IT. IN CONSIDERATION OF TESTVID AGREEING TO PROVIDE THE CONTENT, YOU AGREE TO BE BOUND BY THE TERMS AND CONDITIONS OF THIS AGREEMENT. YOU FURTHER AGREE THAT IT (AND ANY SUBSEQUENT MODIFICATION OF IT) AND THE TERMS AND CONDITIONS POSTED ON THE WEBSITE ARE THE COMPLETE AGREEMENT BETWEEN YOU AND TESTVID, AND THAT SAME SUPERSEDES ANY PRIOR AGREEMENT.

Contents

1. Overview of T2V013 Europe3060

2-D / 3-D

2D

Compressed/ Uncompressed

Uncompressed

Description of video

Scenes from Europe (UK)

Purpose

Test an encoder to deal with all aspects of global and local motion, slow/medium/fast motion, with panning, scrolling, zooming, smooth and erratic, high/low contrast, with limited colours/vivid colours and many common subject types

Number of clips

245 individual video clips (35 at each resolution)

Length of video

Total of 2 hours 16 minutes (over 19 minutes at each resolution)

Total size on disk

1,420 GBytes

Resolution and format of clips

(see sections 3.2.2, 3.2.2 and 3.3 for more information)

Format number	Resolution	Frame rate	Chroma	Bps	Interlaced / progressive
0	1920x1080	59.94	4:2:2	10	Progressive
1	1920x1080	59.94	4:2:0	8	Progressive
2	1920x1080	29.97	4:2:2	10	Int. Top Field First
3	1920x1080	29.97	4:2:0	8	Int. Top Field First
4	1280x720	59.94	4:2:0	8	Progressive
5	1280x720	29.97	4:2:0	8	Progressive
6	720x480	29.97	4:2:0	8	Int. Btm Field First

All YUV planar

Audio format(s)

MPEG-1 Layer II stereo 384kbps CBR 16-bit 48kHz and

WAV linear PCM uncompressed stereo 1536kbps 48kHz

2. Introduction

T2Vid and ***T3Vid*** are high definition (HD) video clips designed for testing video encoders and decoders.

The ***T3Vid*** clips are stereoscopic 3-dimensional (matched left and right images); the ***T2Vid*** clips are 2-D.

Both the ***T2Vid*** and ***T3Vid*** clips come in two variants: those designed to test and stress video encoders (usually in uncompressed YUV format, some of which have associated sound); and compressed video designed to test the range of options available in a standards-compliant video decoder (in compressed format such as MPEG-4/AVC/H.264 or MPEG-2, both as elementary streams and in 'wrappers' such as MPEG-2 Transport Stream).

2.1 T2Vids and T3Vids for testing encoders

Each set of clips for testing encoders contains a diverse selection of clips designed to stress a video encoder in different ways. Typically this includes different movement types, different subjects, different lighting conditions, different camera movement - designed to encompass the majority of different types of difficult-to-encode items. In some cases the quality of filming is marginal - deliberately so, as this is often the hardest to encode. The majority of the filming was done hand-held, as is quite often the case with documentary and even film currently. However, in all cases there has been no video editing as such (unless otherwise stated for a specific clip) - all the separate video clips are direct decodes from the HD camera files, with no re-compression/re-encoding done. Where video editing has been done the re-encode is only at the transitions - the vast majority of these clips are also as per the original camera files.

These clips are provided as sets of video clips, typically 30 - 50 in a set, lasting from 15 - 20 minutes total. These include:

- ‘standard’ HD of real-world subjects (1920x1080, 1280x720; e.g. in New York, San Francisco, London, Munich)
- as above but D-cinema resolutions (2K and 4K)
- as above but 'low' resolutions such as NTSC, D1 PAL, CIF, mobile, web, etc.
- synthetically generated, which has features such as precisely defined motion - ideal for checking such items as encoder motion estimation

The formats/resolutions provided vary from by clip set; as an example all the HD sets are provided at 1920x1080 progressive, 1920x1080 interlaced and 1280x720 progressive formats, in uncompressed YUV format, 16:9 aspect ratio.

All filming was done native HD (or higher resolution, e.g. 2K).

Most clip sets are provided in 8 bits per sample; some are available at 10-bit or 14-bits per sample.

The ***T2Vid*** clips are straightforward 2-D clips; the ***T3Vid*** clips comprise matched left and right video images. The ***T3Vid*** clips have the 'extra dimension' of varying 3-D depth: from shallow to deep 3-D effect, into or out of the picture, with additional artefacts and difficulties that can be encountered in 3-D.

2.1.1 Audio

Sound is provided for almost all clips: in some cases this is sound recorded which is directly associated with the clips, in other cases the sound comprises appropriate background or music.

In a few cases the associated audio is one of the main reasons for recording the clip so both should be viewed together (where this is the case the notes state this for the specific clip in the manual). However, note that in most cases the associated audio provided is just that which could easily be recorded at the same time as the video, typically comprising background sounds, and is often of low quality as the sound was not the primary consideration at the time of filming.

2.1.2 Software

In addition to the video and audio, utility software to process the YUV video is provided as listed in section 4 and information on YUV viewers.

2.2 T2Vids and T3Vids for testing decoders

These are designed to test standards-compliant video decoders, by providing a series of video clips where the same video source material is encoded at different bit-rates with different encoder options.

Normally each clip is provided more than one format: typically MPEG-2 and MPEG-4/AVC/H.264 elementary video formats, at both 1920x1080 and 1280x720, as well as the source video in YUV format. In addition, each clip is typically encoded into one or more 'wrapper' formats such as MPEG-2 Transport Stream, with the associated audio in an appropriate format.

The associated audio is also provided as separate elementary files.

Full information on the currently available sets of ***T2Vid*** and ***T3Vid*** clips series is at www.testvid.com.

2.3 *TestVid* logo

The ***TestVid*** logo (or a variant of it) is usually placed in the lower left corner of the video. It is a condition of the license agreement for ***TVids*** that this logo is not removed or obscured.

The logo has been carefully sized and placed to coincide with the borders of a 16x16 macroblock (where this is possible) and is static throughout each sequence, in order to have minimal effect on encoders and decoders.

2.4 Safety

The ***TVids*** are almost invariably supplied on a USB hard drive unit. This unit may be mains powered or powered directly from the USB port.

In all cases it is imperative that you carefully read and understand the safety information provided with the unit.

2.5 Backup

As the ***TVids*** are almost invariably supplied on a USB hard drive unit it is highly recommended that you make an immediate backup of the whole unit, as hard drives can of course fail. (This backup copy is in addition to the 25 copies allowed by the license agreement.)

The warranty on the hard drive is 180 days, but if it does fail it would of course take some days at least to provide a replacement unit.

3. T2V013 Europe3060 Clip set description

3.1 Set content types

This set of video clips comprise a range of subjects, motion, colours, light levels designed to test and stress 3D video encoders by providing a varied set of conditions:

- subject types such as people, traffic, buildings, sky, water, trees, text..
- movement types such as panning, tracking, hand-held camera, zooming in/out
- subject motion such as into, out of or across the picture, in front of and partially behind objects, fast and slow
- lighting conditions, from bright sunlight, dull daylight, shaded areas, night-time..
- hard to encode items such as reflections, fine lines, patterns, round objects..
- varying camera properties such as depth of field, in/out-of-focus..
- and with sound associated with the clips

In many cases the video is harder to encode than might normally be expected, as the lighting conditions are not ideal or there is significant camera movement, or the focus varies. These features are deliberately used as they often cause the most difficulty to video encoders and represent the worst case that the encoder should encounter in 'normal / real' use.

3.1.1 Scene cuts / composite sequences

Although some sequences have fades/transitions within them, fast scene changes (i.e. scene cuts) are not provided within the set of clips as they are easy to do simply by adding two of the YUV files together.

One way to do this is using the DOS command window:

```
copy /b file1.yuv+file2.yuv file12.yuv
```

(where `file1.yuv` and `file2.yuv` are the two files to be added together, and `file12.yuv` is the result)

This makes a combined file '`file12.yuv`' with a scene cut at the join between the two. (This works as there are no headers on the YUV files.)

The YUV files being added together must be the same resolution, although they can be different frame rates.

The advantages with adding files together in this manner are that:

- it allows composite sequences which either contain fairly similar scenes, so that the resulting scene cut is more 'gentle', or completely different scenes, depending upon how radical a scene cut you wish to have;
- several scenes can be added together to make composite sequences with multiple different levels of scene cuts (from gentle to radical);
- and looping or very long composite sequences can be generated if required, e.g. to play continuously for an hour or more.

3.2 Individual clips provided

A total of 235 YUV clips are provided, comprising 35 individual clips each at the resolutions given in section 3.2.2 below. Al the clips were originally filmed 1920x1080 4:2:2: where necessary the clips concerned were downsized from this.

3.2.1 Clip sizes

For each YUV clip the following naming convention is used:

T2V013n01_Silver_dome_<xsize>x<ysize><f>rr_<d>b_P<chr>.yuv

```
T2V013ncc_<Clipname>_<xsize>x<ysize><f>rr_<d>b_P<chr>.yuv
```

where

n	Number 0 to 6 denoting format: 0 1920x1080 prog 60 10-bit 4:2:2 1 1920x1080 prog 60 8-bit 4:2:0 2 1920x1080 int/TFF * 30 10-bit 4:2:2 3 1920x1080 int/TFF * 30 8-bit 4:2:0 4 1280x720 prog 60 8-bit 4:2:0 5 1280x720 prog 60 8-bit 4:2:0 6 720x480 int/BFF * 30 8-bit 4:2:0 * 'TFF' = Top Field First; 'BFF' = Bottom Field First
cc	Number of clip content, 01-35
<Clipname>	Name of clip content
<xsize>	Horizontal resolution in pixels
<ysize>	Vertical resolution of frame in pixels. Note that for Interlaced video each field is half this height
<f>	'p' or 'i', denoting Progressive or Interlace
rr	Frame rate, expressed as '60' (for 59.94 fps) or '30' (for 29.97 fps)
<d>	Bit depth, either '10' or '8'
<chr>	Chroma format, either '422' or '420'

Examples:

- T2V013001_Silver_dome_1920x1080p60_10b_P422.yuv
  is: the 'Silver_dome' scene, 1920x1080, progressive, 60 fps (actually 59.94), 10-bits per sample, 4:2:2
- T2V013001_Silver_dome_720x480i30_8b_P420.yuv
  is: the 'Silver_dome' scene, 720x480, interlaced (Bottom Field First), 30 fps (actually 29.97), 8-bits per sample, 4:2:0

The interlaced clips are provided 'field sequential', i.e. the whole of the respective Top or Bottom field, followed by the whole of the alternate field. The software utility programs

yuvfieldcombine.exe yuvfieldcombinehr.exe

can be used to combine the separated (alternate) fields into whole frames where the alternate lines contain the alternate fields. See section 4.2 below.

3.2.2 Clip formats

Each of these clips are:

- planar YUV (i.e. for progressive video, a frame of Y followed by a frame of U then a frame of V; for interlaced video, the bottom field of Y plane followed by a plane of U then a plane of V. See section 3.3 for details of the format on disk)
- 4:2:2 or 4:2:0 chroma format
- progressive scan is indicated by 'p' in the filename and interlaced where indicated by 'i' in the filename. The interlaced clips are 'field sequential', i.e. the whole of the respective Top or Bottom field, followed by the whole of the alternate field (see section 3.3 and section for the utility programs to combine the fields)
- square pixels
- picture aspect ratio appropriate to the horizontal and vertical resolutions
- no headers
- top picture row first

All 4:2:2 video is:

- 10-bits per sample, in two bytes (upper bits set to zero)
- Y planes are unsigned nominally 64-940 but may go 0-1023
- U and V planes are centred at 512 and are nominally 64-960 but may go from 0-1023

All 4:2:0 video is:

- 8-bits (one byte) per sample
- Y planes are unsigned nominally 16-235 but may go 0-255
- U and V planes are centred at 128 and are nominally 16-240 but may go from 0-255

All of the clips were filmed at 59.94 frames per second, although the YUV may be re-played / encoded at any speed e.g. 50 fps or 60 fps (the speed difference will be noticeable on some clips at 50 fps but not discernible at 60 fps).

3.2.3 Generation of interlaced video

All the clips were originally filmed progressive at 59.94 fps. The interlaced clips provided are at 29.97 fps: the fields have been generated by extracting the alternate lines from alternate frames in the progressive source video.

3.3 Format of video on disk

All the YUV video is stored in planar form, i.e. a plane of Y followed by a plane of U followed by a plane of V.

3.3.1 1920x1080p60 10-bit 4:2:2

Byte 0 in the file is the least significant byte of the Y data of the pixel at top left of the first frame.

Each of the Y, U and V samples occupies two bytes with the upper bits set to zero.

One sample of Y, U or V:

Memory address	Byte	0								1							
	Bit	0	1	2	3	4	5	6	7	0	1	2	3	4	5	6	7
Video data	Byte	Least significant								Most significant							
	Bit	0	1	2	3	4	5	6	7	8	9	x	x	x	x	x	x

where 'x' = set to 0

Start of each line of Y, U or V

Memory address	Byte	0	1	2	3	4	5	6	7
Video data (10 bits)	Bit	0	x	1	x	2	x	3	x

One frame of Y, U and V:

Plane of Y followed by plane of U followed by plane of V

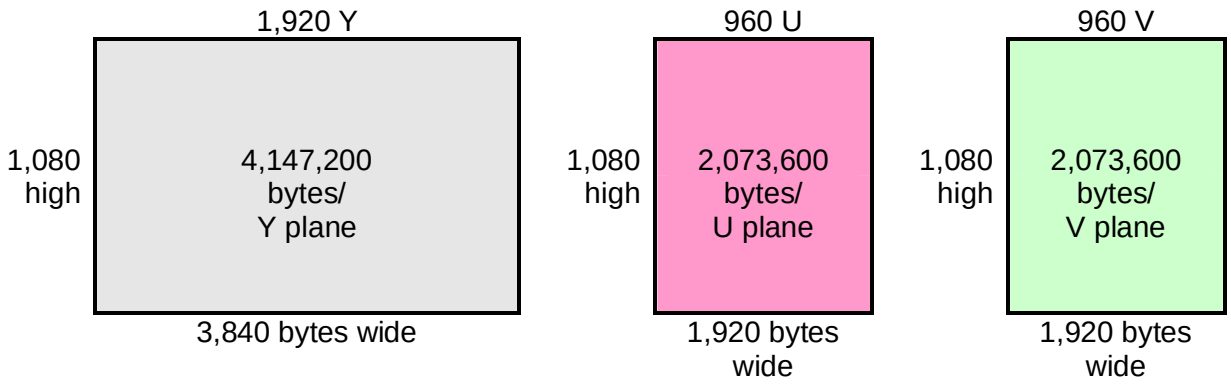

Valid video data ranges:

- Y: 64 - 940
- U and V: 64 - 960

3.3.2 1920x1080p60 8-bit 4:2:0

Byte 0 in the file is the start of the Y data of the pixel at top left of the first frame.

One frame of Y, U and V:

Plane of Y followed by plane of U followed by plane of V

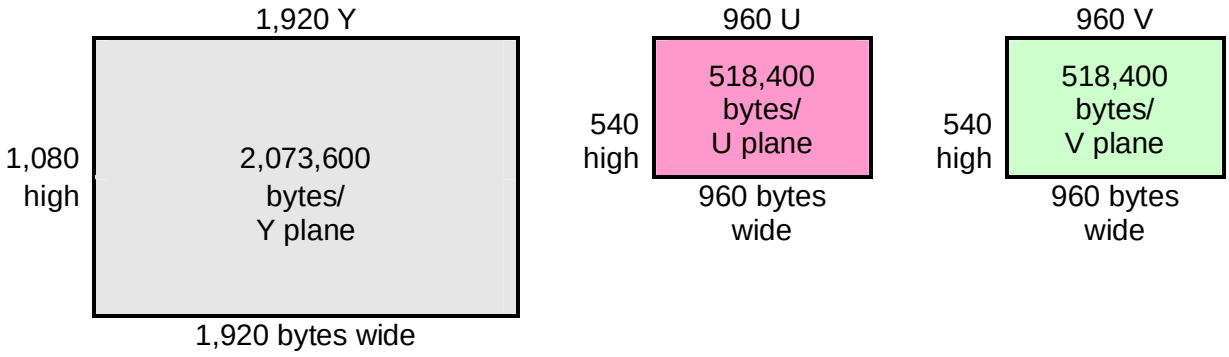

Valid video data ranges:

- Y: 16 - 235
- U and V: 16 - 240

3.3.3 1920x1080i30 10-bit 4:2:2

Byte 0 in the file is the least significant byte of the Y data of the pixel at top left of the first frame.

Each of the Y, U and V samples occupies two bytes [little-endian] with the upper bits set to zero.

One sample of Y, U or V:

Memory address	Byte	0								1							
	Bit	0	1	2	3	4	5	6	7	0	1	2	3	4	5	6	7
Video data	Byte	Least significant								Most significant							
	Bit	0	1	2	3	4	5	6	7	8	9	x	x	x	x	x	x

where 'x' = set to 0

Start of each line of Y, U or V

Memory address	Byte	0	1	2	3	4	5	6	7
Video data (10 bits)	Bit	0	x	1	x	2	x	3	x

Note: as supplied, the 1080i video is stored on disk with alternating fields of YUV, bottom field first. If the 1080i video is required in frame format, with the alternating fields on alternating lines, the supplied utility program `yuvfieldcombinehr` can be used to combine the fields. See section 4.2.2 for more information.

Each frame of Y, U and V is divided into alternating fields, Top Field First, with the YUV data as follows (each field being half the height of the frame):

TOP field			BTM field		
Y data TOP field	U data TOP field	V data TOP field	Y data BTM field	U data BTM field	V data BTM field

For each field: plane of Y followed by plane of U followed by plane of V

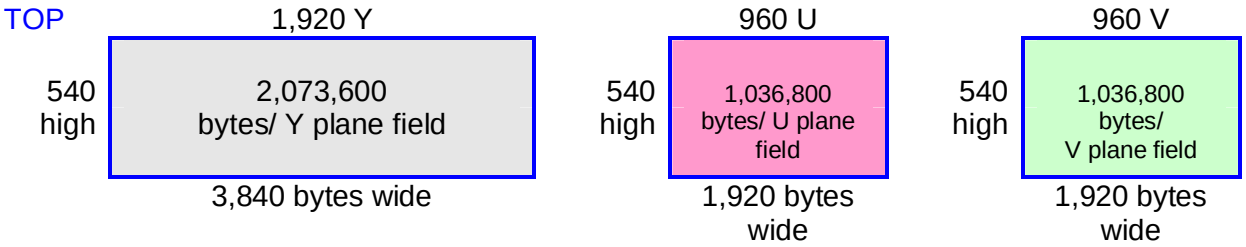

followed by Bottom field:

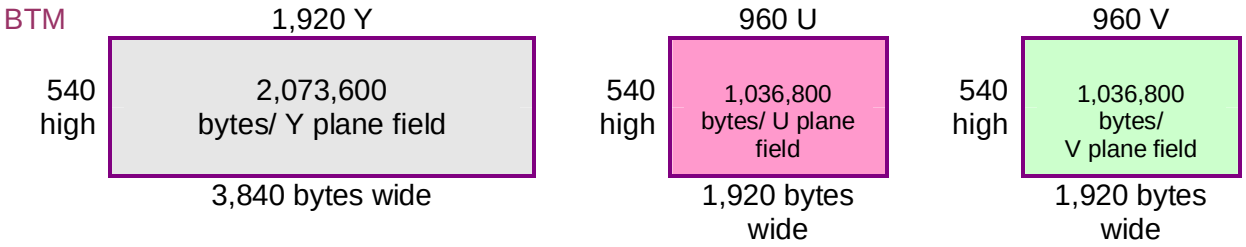

Valid video data ranges:

- Y: 64 - 940
- U and V: 64 - 960

3.3.4 1920x1080i30 8-bit 4:2:0

Byte 0 in the file is the start of the Y data of the pixel at top left of the first frame.

Note: as supplied, the 1080i video is stored on disk with alternating fields of YUV, bottom field first. If the 1080i video is required in frame format, with the alternating fields on alternating lines, the supplied utility program `yuvfieldcombine` can be used to combine the fields. See section 4.2.2 for more information.

Each frame of Y, U and V is divided into alternating fields, bottom field first, with the YUV data as follows (each field being half the height of the frame):

TOP field			BTM field		
Y data TOP field	U data TOP field	V data TOP field	Y data BTM field	U data BTM field	V data BTM field

For each field: plane of Y followed by plane of U followed by plane of V

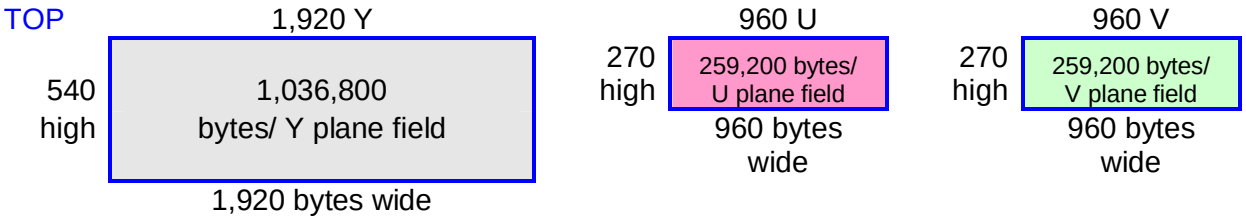

followed by Bottom field:

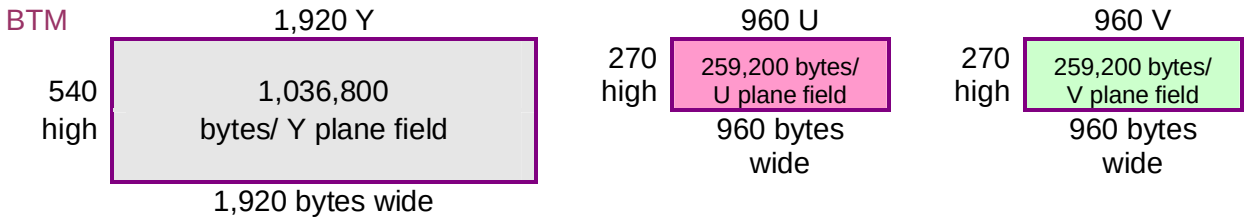

Valid video data ranges:

- Y: 16 - 235
- U and V: 16 - 240

3.3.5 720p60 and 720p30

Byte 0 in the file is the Y data of the pixel at top left of the first frame.

One frame of Y, U and V:

Plane of Y followed by plane of U followed by plane of V

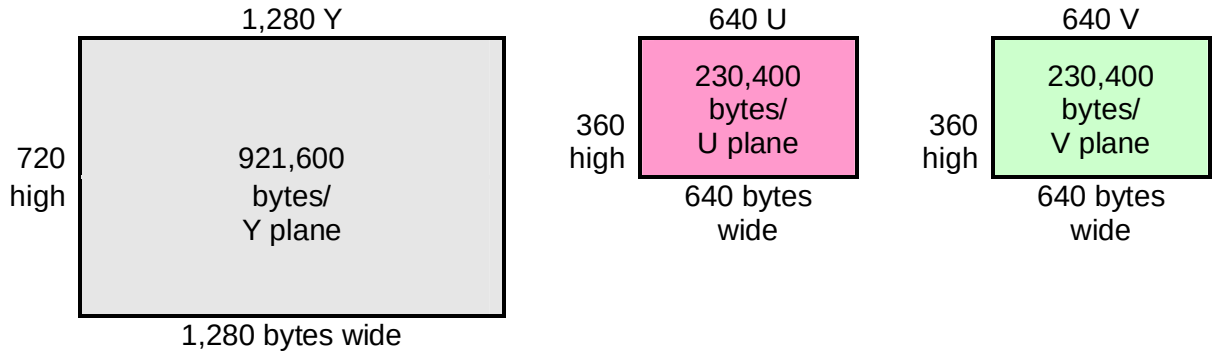

Valid video data ranges:

- Y: 16 - 235
- U and V: 16 - 240

3.3.6 720x480i30 (NTSC)

Byte 0 in the file is the Y data of the pixel at top left of the first frame.

Note: as supplied, the 720x480 interlaced video (NTSC format) is stored on disk with alternating fields of YUV, bottom field first. If the interlaced video is required in frame format, with the alternating fields on alternating lines, the supplied utility program `yuvfieldcombine` can be used to combine the fields. See sections 4 and 4.2.2 for more information.

Each frame of Y, U and V is divided into alternating fields, bottom field first, with the YUV data as follows (each field being half the height of the frame):

BTM field			TOP field		
Y data BTM field	U data BTM field	V data BTM field	Y data TOP field	U data TOP field	V data TOP field

For each field: plane of Y followed by plane of U followed by plane of V

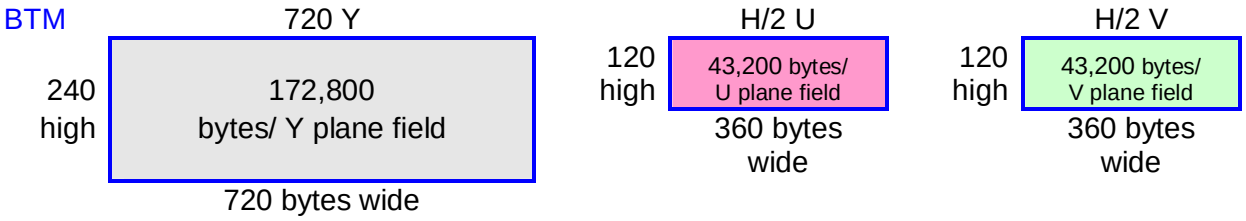

followed by top field:

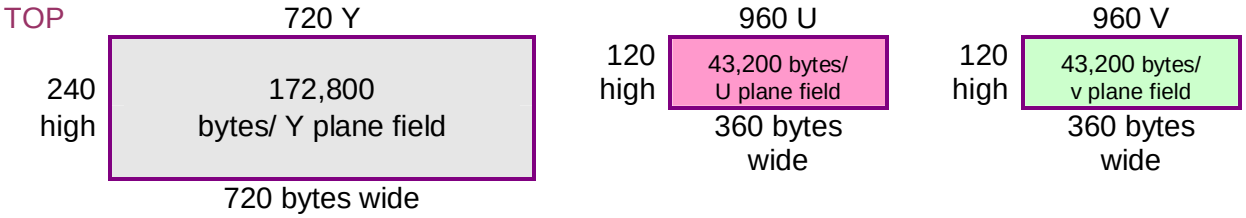

Valid video data ranges:

- Y: 16 - 235
- U and V: 16 - 240

3.4 Audio

Audio clips are provided for every video clip, matching the video length. In the vast majority of cases this was the actual audio recorded with the video.

Where the audio provided was not recorded with the video, similar/appropriate audio is provided, matched in time-length. This is denoted by '`_sim_`' in the audio filename (instead of '`_act_`', denoting actual audio recorded at the time).

Clearly the main point of the ***Tvids*** is video testing, so the audio supplied is intended to be used to check timing/correlation during the encode process rather than to be particularly useful as standalone audio. Consequently, this audio has not been cleaned up or normalised and nor was much time spent in ensuring good audio recording during filming.

All the audio clips are provided in two formats:

- MPEG-1 Layer II stereo 384kbps CBR 16-bit 48kHz and
- WAV linear PCM uncompressed stereo 1536kbps 16-bit 48kHz

4. Software to view & process YUV video

4.1 Viewing/playing the YUV video

This section explains some of the technical requirements for playing the YUV video (computer and software requirements).

4.1.1 Computer requirements of viewing the YUV video

The ***Tvids*** YUV files are uncompressed and some of the clips within this set require a high performance computer in order to play the video in real-time at full frame rates. The sustained continuous data rates required from disk are:

- **1080p60 422 10-bit:** 497MBytes/sec
- **1080i30 422 10-bit:** 249MBytes/se

This means that the above rates must be achieved using disk arrays, solid state disks or with the video loaded into RAM disk.

Useful references as starting points for system recommendations are given on the websites for Aja (www.aja.com) and BlackMagic Design (www.blackmagic-design.com) although various companies provide information about how this can be achieved / the configuration of system required to achieve this. A list is given on the **TestVid** website under Support at:

http://www.testvid.com/highperfpc.html

TestVid accepts no responsibility or liability for use of any of the information on the pages listed.

4.1.2 YUV viewers/players

There are a number of software programs for viewing YUV files: a list is given on the **TestVid** website under Support at:

http://www.testvid.com/yuvviewers.html

Links are provided to the pages where the YUV viewers can be downloaded.

Note that these programs only show one YUV stream at a time.

TestVid accepts no responsibility or liability for download or use of any of the programs listed; the user should carefully examine the license agreement that applies to the software concerned.

4.1.3 Programs that do not display/import YUV files directly

A number of common programs - such as Final Cut Pro, Adobe Premiere Pro, Sony Vegas and others may not import YUV uncompressed files directly: the YUV files may need to be wrapped e.g. in an AVI or converted to another format

- wrap the YUV within an AVI file
- convert the YUV into a different format acceptable to the chosen program
- play the YUV video out in real-time on SDI and use an adaptor to display the two SDI inputs

Each of the above options is discussed below.

4.1.4 Wrap the YUV within an AVI file

There are a number of programs to do this; probably the easiest is to use a program called FFMPEG. This is used as a command line program: it can easily be found using a search engine.

Usage:

```
ffmpeg -r 60 -s 1920x1080 -i <infile.yuv> -vcodec copy <outfile.avi>
```

where

- `-r 60` sets the frame rate to 60 fps (FFMPEG default is 25 fps)
- `-s 1920x1080` sets the resolution of the input file
- `<infile.yuv>` is the input YUV filename
- `<outfile.avi>` is the output AVI filename

Although FFMPEG is being updated from time to time, it assumes YUV 8-bit 4:2:0 as input, so the above only works directly on the 8-bit 4:2:0 YUV sequences provided.

However, there is a work-around which can used:

- convert the 10-bit 4:2:2 YUV sequences to 8-bit 4:2:0 using the supplied program `yuv10bto8b.exe` (see below in section 4.2)
- then use the above method to wrap the resultant YUV files in AVI files, using a command line such as given above

For convenience, a batch file is provided which will make AVIs for all the sequences. For the 10-bit 4:2:2 clips, a batch file is also provided that will make the 4:2:0 8-bit versions and the corresponding AVIs: this is provided in the `\Software` folder on the disk unit.

Note that in order to use these batch files:

- firstly, the ***Tvids*** sequences will need to be copied to a different disk as there is insufficient space on the supplied disk unit (as the program `yuv10bto8b.exe` only writes to the same folder as where the source file is located)
- secondly, the correct paths will need to be set up in the batch files, to FFMPEG and by doing a 'Search and Replace' (Ctrl-H in Windows Notepad)

4.1.5 Convert YUV to another format

As the purpose of this set of ***Tvids*** sequences is to test encoders (and presumably purchased for this purpose), the user will have a means to encode the YUV sequences into a compressed format such as MPEG-2, H.264/MPEG-4/AVC, MVC or other, so can then view the compressed sequences.

4.1.6 Real-time play-out of the YUV video

The YUV files provided are suitable for direct use with video encoders, but in some circumstances it may desirable to play-out the YUV in real-time on an SDI / ASI / DVI / HDMI link.

Essentially, the issue is to get the uncompressed ***Tvids*** YUV files from disk onto an SDI / ASI / DVI / HDMI interface via a specialised I/O board.

All video servers, many hardware encoders and a large proportion of other professional broadcast equipment have internal hard disks and Gig-E Ethernet interfaces. This allows the ***Tvids*** to be directly copied over the Ethernet network onto the hard disk, and play-out from there.

Where it is required to produce an SDI / ASI / DVI / HDMI stream as input to other equipment, this can be done relatively straightforwardly, using:

- a high performance PC / Mac
- with high speed RAID hard disks

- with an appropriate SDI etc. I/O board, e.g. from Aja, BlackMagic Design or Bluefish444
- and software to control moving the video from disk onto the I/O interface

A schematic of the required set-up is:

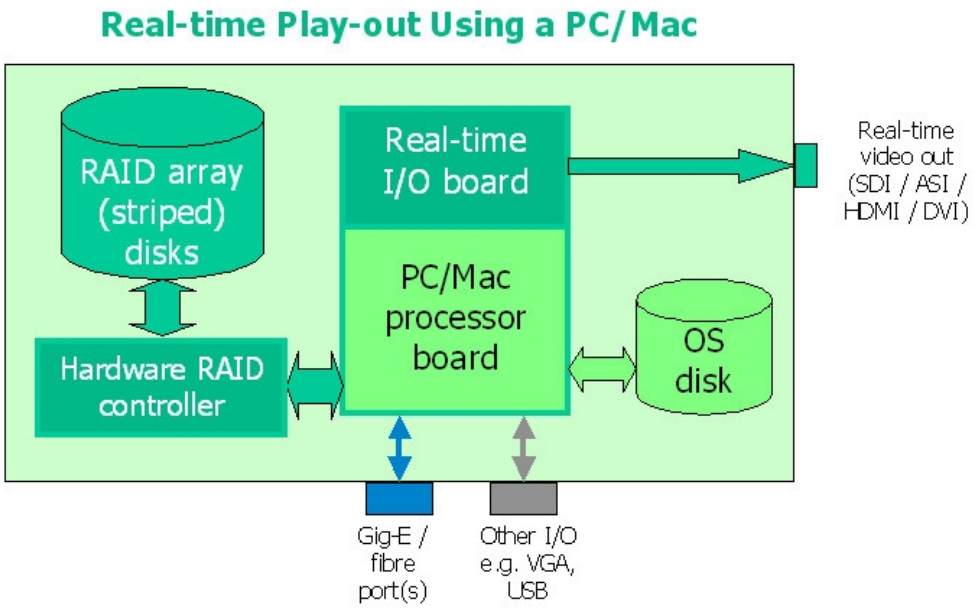

See the **TestVid** website:

http://www.testvid.com/support.html

More detailed information is provided, including a page on "broadcast applications" and the steps required are covered in some detail in the white paper, ”Real-Time Play-out of YUV Video in a Broadcast Environment”

4.2 Software tools provided

The following software is provided:

Software tool	Purpose
`yuvfieldcombine` `yuvfieldcombinehr`	Takes the sequential half-height fields in the interlaced clips and combines them into single full-height frames with alternate lines. `yuvfieldcombine` only works on the 8-bit 4:2:0 interlaced clips (1920x1080 and 720x480) `yuvfieldcombinehr` only works on the 10-bit 4:2:2 interlaced clips (1920x1080)
`yuvmake1088`	Add extra lines at the top/bottom of a 1920x1080 YUV file to make it 1920x1088 ***NOTE**: this only works on the 1920x1080 8-bit 4:2:0 clips (p60 or i30)*
`yuvletterbox`	Alter provided video by making it appear 'letterboxed' (i.e. with black bands top and bottom of each frame) or 'pillarboxed' (with black bands

	left and right) ***NOTE**: this only works on the 1920x1080 8-bit 4:2:0 clips (p60 or i30)*
`yuv10bto8b`	Make 8-bit 4:2:0 versions of the provided 10-bit 4:2:2 video ***NOTE**: this only works on the 1920x1080 10-bit 4:2:2 clips (p60 or i30)*

Note

1. The software tools are provided solely for the use of the purchaser of the license to use this set of video clips and may not be used with other video or provided to other persons/organisations.
2. The use of these software tools is only on the basis of complete acceptance of the license agreement as given in section below. The fact of using these software tools gives your explicit consent to abide by the terms of the license agreement.

4.2.1 License agreement relating to the software tools provided

This license agreement below applies to all software listed in this section 4.2.

The software program(s) is/are provided to the user without any license fee or royalty on an "as is" basis, solely as an incidental part of the clip set and do not form part of the contract.
TestVid disclaims any and all warranties, whether express, implied, or statutory, including any implied warranties or merchantability or of fitness for a particular purpose.
The user makes use of this/these program(s) at their own risk. In no event shall **TestVid** be liable for any incidental, punitive, or consequential damages of any kind whatsoever arising from the use of this/these program(s).

This disclaimer of warranty extends to the user of this/these program(s) and user's customers, employees, agents, transferees, successors and assigns.

The software program(s) is/are provided solely to the purchaser of the relevant set of ***TVids*** and may not be sent to or copied to any other person or organisation or used with any other video

4.2.2 yuvfieldcombine and yuvfieldcombinehr

This is a command line program for combining interlaced fields which are stored in alternating format (bottom field followed by top field, each half-height) into frames where alternate lines contain alternate fields.

Note: `yuvfieldcombine` only works on the 8-bit 4:2:0 clips and `yuvfieldcombinehr` only works on the 10-bit 4:2:2 clips

`yuvfieldcombine` usage:

```
yuvfieldcombine <inputfile.yuv> <xsize> <ysize> <nnn> <f>
```

where

- `<inputfile.yuv>` is the input filename (must have extension `.yuv`)
- `<xsize>` = horizontal resolution of the input file (must be multiple of 2)
- `<ysize>` = vertical resolution of **frame** of the input file, e.g. set to 1080 for 1920x1080i; set to 480 to 720x480i (must be multiple of 4)
- `<nnn>` = number of video frames to process. Set to 0 to process all frames. If `<nnn>` is greater than the number of frames then all frames will be processed

- <f> = field order: 0 = Top Field First, 1 = Bottom Field First

The filename for the output file, with the fields combined will be

`inputfile_FLDCMB.yuv` (the '_FLDCMB' is added by `yuvfieldcombine`)

The output file is put in the same folder as the input file.

Example:

```
yuvfieldcombine T2V013601_Silver_dome_720x480i30_8b_P420.yuv 720 480 0 1
```

This combines the alternating (half-height) fields of the 01_Silver_dome clip (NTSC format, Bottom Field First) into full-height frames with alternate lines for each field and names the output file:

`T2V013601_Silver_dome_720x480i30_8b_P420_FLDCMB.yuv`

`yuvfieldcombinehr` usage:

```
yuvfieldcombinehr <inputfile.yuv> <xsize> <ysize> <nnn> <f> <c>
```

where

- <inputfile.yuv> is the input filename (must have extension .yuv)
- <xsize> = horizontal resolution of the input file (must be multiple of 2)
- <ysize> = vertical resolution of **frame** of the input file, e.g. set to 1080 for 1920x1080i; set to 480 to 720x480i (must be multiple of 4)
- <nnn> = number of video frames to process. Set to 0 to process all frames. If <nnn> is greater than the number of frames then all frames will be processed
- <f> = field order: 0 = Top Field First, 1 = Bottom Field First
- <c> = chroma format: 0 = 4:2:2, 1 = 4:4:4

The filename for the output file, with the fields combined will be

`inputfile_FLDCMB.yuv` (the '_FLDCMB' is added by `yuvfieldcombinehr`)

The output file is put in the same folder as the input file.

Example:

```
yuvfieldcombinehr  T2V013301_Silver_dome_1920x1080i30_10b_P422.yuv  1920
1080 0 0 0
```

This combines the alternating (half-height) fields of the 01_Silver_dome clip (1920x1080 10-bit 4:2:2 format, Top Field First) into full-height frames with alternate lines for each field and names the output file:

`T2V013301_Silver_dome_1920x1080i30_10b_P422_FLDCMB.yuv`

4.2.3 yuvmake1088

This is a command line program for adding 8 additional lines to 1080 vertical resolution video, to make it 1088 vertically i.e. an integer multiple of 16.

Note: this program only works on video that is 1920x1080, 4:2:0, 8-bits per sample.

All the lines added are greyscale, set to one grey colour.

Usage:

```
yuvmake1088 <inputfile.yuv> <p> <n> <c>
```

where

- `<inputfile.yuv>` is the input filename which is 1080 lines vertically (must have extension `.yuv`)
- <p> = progressive or interlaced input file, set to ‘p’ or ‘i’
- <n> = the number of the 8 lines to add at the top of each frame (0, 2, 3, 6 or 8). ‘0’ means add zero lines at the top i.e. at 8 lines at the bottom; ‘8’ means add 8 lines at the top and zero at the bottom; ‘4’ means add 4 at top and bottom, etc.
- <c> = greyscale colour to add, number 16-235. 16=black; 235=white. Numbers less than 16 will be set to 16; greater than 235 will be set to 235.

The filename for the output file, with the extra 8 lines added, will be

`inputfile_1088.yuv` (the ‘`_1088`’ is added by `yuvmake1088`)

The output file is put in the same folder as the input file.

Example:

```
yuvmake1088 T2V013101_Silver_dome_1920x1080p60_8b_P420.yuv p 4 16
```

This adds 4 lines to the top and 4 lines to the bottom of each frame of the input file, the extra lines are nominal black (value 16 in Y and 128 in U and V), and names the output file:

`T2V013101_Silver_dome_1920x1080p60_8b_P420_1088.yuv`

4.2.4 yuvletterbox

This is a command line program for creating a black band at the top & bottom of each frame (or left & right), by over-writing the video data in these bands. The luminance of the 'black' band may be set; the size of the bands top and bottom (left/right) may be set. The ***Tvids*** logo is moved to remain visible in the bottom left corner of the video data.

Note: this program only works on video that is 1920x1080, 4:2:0, 8-bits per sample.

1080p (1920x1080) videos are 16:9 picture aspect ratio (1.777:1).

Common picture aspect ratios with areas of letterbox / pillarbox are:

Picture aspect ratio	**1080p (1920x1080)**
Default	**Number of black lines top & bottom**
1.777:1 (16:9)	0, 0
Letterbox	**Number of black lines top & bottom**
1.85:1	21, 21
2.35:1	131, 132
Pillarbox	**Number of black lines left & right**
1.33:1 (4:3)	240, 240
14:9 (1.56:1)	117, 118

Usage:

```
yuvletterbox <inputfile.yuv> <xsize> <ysize> <nnn>     (cont'd)
                        <f> <blk> <l> <tl> <br>
```

where

- `<inputfile.yuv>` is the input filename (must have extension `.yuv`)
- `<xsize>` = horizontal resolution of the input file (must be multiple of 2)
- `<ysize>` = vertical resolution of frame of the input file, e.g. set to 1080 for 1920x1080p (must be multiple of 4)
- `<nnn>` = number of video frames to process. Set to 0 to process all frames. If `<nnn>` is greater than the number of frames then all frames will be processed
- `<f>` = format, i.e. progressive or interlaced input file
- `<blk>` = 'black' colour to add, number 16-235. 16=black; 235=white. Numbers less than 16 will be set to 16; greater than 235 will be set to 235.
- `<l>` = letterbox or pillarbox, set to 'l' or 'p'. If set to 'l' (for letterbox) then the values for `<tl>` and `<br>` are used respectively for the top and bottom of the video; if set to 'p' (for pillarbox) then the values for `<tl>` and `<br>` are used respectively for the left and right of the video
- `<tl>` = the number of the lines (columns) to over-write at the top (left) of each frame with the `<blk>` value. Valid values are 0 to 400
- `<br>` = the number of the lines (columns) to over-write at the bottom (right) of each frame with the `<blk>` value. Valid values are 0 to 400

Example:

```
yuvletterbox inputfile.yuv 1920 1080 0 p 16 l 21 21
```

will produce a letterboxed version of the `inputfile.yuv` file, 1920x1080, all frames, progressive, black colour 16, with 21 black lines top and bottom (making a visible picture aspect ratio of 1:85:1)

The filename for the output file, with the letterboxed/pillarboxed content will be

`inputfile_LBOX.yuv` if `<l>` = 'l', or (the '`_LBOX`' is added by `yuvletterbox`)

`inputfile_PBOX.yuv` if `<l>` = 'p', or (the '`_PBOX`' is added by `yuvletterbox`)

The output file is put in the same folder as the input file.

4.2.5 yuv10bto8b

This is a command line program for producing a new 1920x1080 resolution file with 4:2:0 and 8-bits per sample from an input file which is 1920x1080 but 4:2:2 and 10-bits per sample.

This assumes the 1920x1080 input video is in the format as supplied by **TestVid**.

Usage:

```
yuv10bto8b <inputfile.yuv> 1920 1080 <nnn> <f>
```

where

- `<inputfile.yuv>` is the input filename which is 1920x1080 (must have extension `.yuv`)

- <nnn> = number of video frames to process. Set to 0 to process all frames. If <nnn> is greater than the number of frames then all frames will be processed
- <f> = format, 'p' or 'i' i.e. progressive or interlaced input file. Note that if interlaced, this must be field sequential (i.e. as supplied by **TestVid**)

The filename for the output file will be

`inputfile_420_8b.yuv` (the '`_420_8b`' is added by `yuv10bto8b`)

The output file is put in the same folder as the input file.

Example:

```
yuv10bto8b T2V013001_Silver_dome_1920x1080p60_10b_P422.yuv 0 p
```

This adds 4 lines to the top and 4 lines to the bottom of each frame of the input file, the extra lines are nominal black (value 16 in Y and 128 in U and V), and names the output file:

`T2V013001_Silver_dome_1920x1080p60_10b_P422_420_8b.yuv`

For convenience, a batch file is provided which will make AVIs for all the sequences. For the 10-bit 4:2:2 clips, a batch file is also provided that will make the 4:2:0 8-bit versions and the corresponding AVIs: this is provided in the `\Software` folder on the disk unit.

Also provided are a few example AVIs of the sequences: these are in the `\Example_AVIs` folder on the hard disk unit.

Note that in order to use these batch files:

- firstly, the ***Tvids*** sequences will need to be copied to a different disk as there is insufficient space on the supplied disk unit (as the program `yuv10bto8b.exe` only writes to the same folder as where the source file is located)
- secondly, the correct paths will need to be set up in the batch files, to `FFMPEG`, `yuv10bto8b` and the YUV files by doing a 'Search and Replace' (Ctrl-H in Windows Notepad)

See section 4.1.4 for information on `FFMPEG` and wrapping a YUV file within an AVI.

5. List of clips

5.1 Clips summary

- Total time of clips (at each resolution): **19 mins 27 secs and 4 frames (30i)**
  26 frames (30p)
  45 frames (60p)

(actually calculated at 59.94 fps / 29.97 fps as appropriate)

Clip number(s)	Title	Main purposes	Duration (mins:secs: frames)	Begin	End
T2V013n01	Silver_dome	Codec efficiency in scene with static background but with water and reflections	00:39:56 (60p) 00:39:28 (30i) 00:39:28 (30p)		
T2V013n02	PedXing	Codec efficiency with detailed static scene, objects (people) passing close and obscured	00:34:42 (60p) 00:34:21 (30i) 00:34:21 (30p)		
T2V013n03	Ice_cream_van	Global motion tracking with rapid horizontal, vertical and rotational movement and fine natural objects (grass, leaves, trees)	00:36:32 (60p) 00:36:16 (30i) 00:36:16 (30p)		
T2V013n04	Cafe_by_docks	Slow then rapid global horizontal movement with rotation and subject tracking with fine detail background	00:34:06 (60p) 00:34:03 (30i) 00:34:03 (30p)		
T2V013n05	Ferry_arrives	Slow not-completely regular global motion plus subject motion and obscuration on reflective water surface, with fine details/moire patterns	00:33:02 (60p) 00:33:00 (30i) 00:33:01 (30p)		
T2V013n06	Big_Ben	Motion vector tracking of multiple crossing objects (people and vehicles) close to camera with detailed objects a long way away	00:26:48 (60p) 00:26:23 (30i) 00:26:24 (30p)		
T2V013n07	Suspension_br	Slow nearly regular horizontal global motion tracking in both directions, moving from man-made to natural objects and back again, with fade and over-bright areas	00:37:43 (60p) 00:37:21 (30i) 00:37:22 (30p)		
T2V013n08	Traffic_twds	Static scene testing motion tracking of objects which increase in size and move diagonally	00:36:42 (60p) 00:36:21 (30i) 00:36:21 (30p)		
T2V013n09	Cabot_Tower	Random rapid movement (including rotation) with highly detailed foreground (grass) man-made structure and largely monochrome background (blue sky)	00:51:10 (60p) 00:51:04 (30i) 00:51:05 (30p)		
T2V013n10	Shopping_mall	Global motion tracking with large number of patterns (straight and curved), bright colours and high contrast areas	00:41:29 (60p) 00:41:14 (30i) 00:41:15 (30p)		

T2V013n11	Train_comes _n_goes	Tracking of large object in frame which increases in size with complex background, short zoom and fade	00:34:48 (60p) 00:34:24 (30i) 00:34:24 (30p)		
T2V013n12	Pool_shark	'Codec nightmare', where motion vector tracking is largely impossible due to the similarity and random movement of the areas of water and tile patterns	00:28:42 (60p) 00:28:20 (30i) 00:28:21 (30p)		
T2V013n13	Centre_fast	Very rapid global motion tracking in scene with many foreground and background objects being obscured and moving at different rates (due to differing distances)	00:12:19 (60p) 00:12:09 (30i) 00:12:10 (30p)		
T2V013n14	Soccer	High contrast scene with rapid fades and multiple subject tracking	00:24:53 (60p) 00:24:26 (30i) 00:24:26 (30p)		
T2V013n15	Blaise_woods	'Codec nightmare 2', with global zoom (by movement into the scene) with many areas almost identical (leaves) and rapid irregular global motion and rotation	00:41:43 (60p) 00:41:21 (30i) 00:41:22 (30p)		
T2V013n16	Duck_truck	Tracking of multiple objects (people then vehicles) in scene which also has some random global motion	00:38:06 (60p) 00:38:03 (30i) 00:38:03 (30p)		
T2V013n17	St_Pauls	Tracking of linear objects in a largely monochromatic scene with random movement	00:23:58 (60p) 00:23:28 (30i) 00:23:29 (30p)		
T2V013n18	Waterfall	Codec efficiency testing in largely static scene but with areas of random high contrast movement (water)	00:45:01 (60p) 00:45:00 (30i) 00:45:01 (30p)		
T2V013n19	Portents	Accuracy of tracking of many identical patterns with slow global motion	00:22:57 (60p) 00:22:28 (30i) 00:22:28 (30p)		
T2V013n20	Street_ performer	Codec efficiency checking with limited subject motion and limited global motion	00:36:03 (60p) 00:36:01 (30i) 00:36:02 (30p)		
T2V013n21	Footbridge	Codec efficiency checking with virtually no global motion and limited obscured subject motion	00:55:33 (60p) 00:55:16 (30i) 00:55:16 (30p)		
T2V013n22	Fountains	Global motion of angled subjects, where overall global angle gradually changes with detailed and moire patterns	01:13:01 (60p) 01:13:00 (30i) 01:13:01 (30p)		
T2V013n23	Mall_at_night	Motion tracking in largely dark scene with small high contrast text areas	00:44:39 (60p) 00:44:19 (30i) 00:44:20 (30p)		
T2V013n24	Musical_reflecti ons	Codec efficiency checking of largely static scene wholly made of reflections	00:35:41 (60p) 00:35:20 (30i) 00:35:21 (30p)		

T2V013n25	Suspension_br_zoom	Motion tracking with slow zoom out with also varying focus, heat haze and high contrast areas	00:21:46 (60p) 00:21:22 (30i) 00:21:23 (30p)		
T2V013n26	Garden	Codec speed and stability checking in scene tracking random detail (grass, trees) with continual global movement	00:19:46 (60p) 00:19:22 (30i) 00:19:23 (30p)		
T2V013n27	Balloons	Motion tracking of many brightly covered circular objects moving randomly	00:15:12 (60p) 00:15:06 (30i) 00:15:06 (30p)		
T2V013n28	The_Matthew	Slow scroll and pan movement of detailed scene with reflections and subject tracking	00:43:39 (60p) 00:43:19 (30i) 00:43:20 (30p)		
T2V013n29	Falafel_King	Rapid global motion with continual patterns and text	00:16:21 (60p) 00:16:10 (30i) 00:16:11 (30p)		
T2V013n30	String_quartet	Medium speed global motion with some rotation in a highly patterned scene with also people	00:27:02 (60p) 00:27:00 (30i) 00:27:01 (30p)		
T2V013n31	Number_7_boat	Slow subject tracking in complex scene with water and detail background	00:19:32 (60p) 00:19:15 (30i) 00:19:16 (30p)		
T2V013n32	Night_cars	Global motion and subject tracking in extremely grainy dark scene with rapid continual variation in light levels (due to non-synchronisation of lights with the camera shutter)	00:33:12 (60p) 00:33:05 (30i) 00:33:06 (30p)		
T2V013n33	Follow_that_ship	Random medium speed tracking of a complex subject, partially obscured	00:13:13 (60p) 00:13:06 (30i) 00:13:07 (30p)		
T2V013n34	Roundabout	Partial tracking of subject where the background moves relatively more	00:50:39 (60p) 00:50:19 (30i) 00:50:19 (30p)		
T2V013n35	Small_airplane	Codec efficiency check of highly compressible sequence (but ensuring no banding in background)	00:17:47 (60p) 00:17:23 (30i) 00:17:23 (30p)		

5.2 Clip features

5.2.1 PDF file searching for specific clip features

The PDF of the user manual may be searched to find clips that match the given CF-words ('CF'= Clip Feature).

5.2.2 Excel file sorting for specific clip features

In addition to the PDF of this manual, an Excel file is provided which lists all the clips and the clip features in columns. This spreadsheet is in Excel .xls format (compatible with Excel versions from 97-2000 and later).

There are two tabs in the spreadsheet:

- the first tab has the clip set title: this has all the items listed in the manual for the clip
- the second tab "Clip features" just lists the individual clips, with the list of their clip features and individual columns for each individual clip feature.

Probably the "Clip features" tab is easiest to use to find specific clips with specific features, although every column may be sorted for specific features, by clicking on the drop-down arrow adjacent to each column heading (the examples below are from the T2V001 USA East clip set)

	A	B	C	D	E	F	G	
1			GN.01	GN.02	GN.03	GN.04	GN.05	GN.06
2	Number(s)	Title	Filename(s)	Horizontal x vertical si	Progressive / Interlaced	Video format	Bits per sam	Video c
3	T2V001001, T2V001101, T2V0	Bars_countdown	T2V001001_Bars_countdown_1920x1080p.yuv :	1920x1080; 1280x720	'p' file suffix = progressive; 'i'	YUV planar 4:	8 (for each of	HD colo
4	T2V001002, T2V001102, T2V00 202	Stars_n_Stripes	T2V001002_Stars_n_Stripes_1920x1080p.yuv :	1920x1080; 1280x720	'p' file suffix = progressive; 'i'	YUV planar 4:	8 (for each of	US flag
5	T2V001003, T2V001103, T2V 1203	Times_Square	T2V001003_Times_Square_1920x1080p.yuv : T2	1920x1080; 1280x720	'p' file suffix = progressive; 'i'	YUV planar 4:	8 (for each of	Somewh
6	T2V001004, T2V001104, T2V 1204	Chrysler_building	T2V001004_Chrysler_building_1920x1080p.yuv :	1920x1080; 1280x720	'p' file suffix = progressive; 'i'	YUV planar 4:	8 (for each of	Slow zo
7	T2V001005, T2V001105, T2V 1205	Display	T2V001005_Display_1920x1080p.yuv : T2V0011	1920x1080; 1280x720	'p' file suffix = progressive; 'i'	YUV planar 4:	8 (for each of	Large ou

Click arrow to get drop-down list of items in this column (example below for 'SS.01 People')

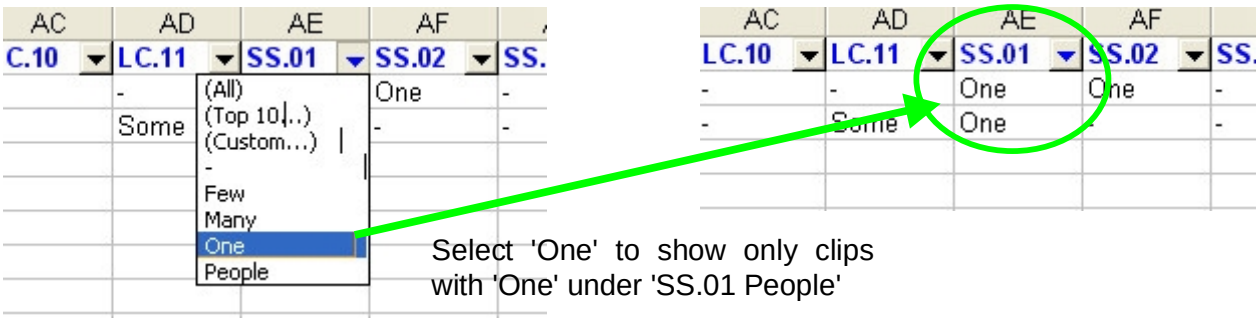

Select 'One' to show only clips with 'One' under 'SS.01 People'

Note that this first tab on the spreadsheet is roughly 100 columns wide (from column A to column CZ), so it may be helpful to use the 'Freeze Panes' feature (on the 'Window' menu in Excel 2000 and 2003) or split windows to keep the clip number visible.

The "Clip features" tab appears and can be sorted as indicated below:

	A	B	C	D	E	F	G
1	Clip number / nam	Clip features	CF-animal	CF-angl	CF-bandin	CF-black_background	CF-bright_daylight
2	T2V001001_Bars_countdown	CF-text, CF-dark_areas, CF-patterns, CF-black_background, CF-round_objects, CF-transitions, CF-large_monochromatic				y	
3	T2V001002_Stars_n_Stripes	CF-bright colours, CF-large_monochromatic, CF-movement_across					
4	T2V001003_Times_Square	CF-panning, CF-complex_scene					
5	T2V001004_Chrysler_building	CF-zoom_in, CF-fine_details, CF-low_contrast, CF-dull_daylight					
6	T2V001005_Display	CF-high_contrast, CF-rapid_changes					
7	T2V001006_Smiling	CF-faces, CF-people					
8	T2V001007_Traffic_duty	CF-faces, CF-text, CF-people					
9	T2V001008_Empire_State	CF-patterns, CF-scroll, CF-faces, CF-hand_held					
10	T2V001009_FDNY	CF-out_of_focus, CF-vehicles					
11	T2V001010_Checked_caps	CF-people, CF-movement_out, CF-patterns					
12	T2V001011_Gold_statue	CF-water, CF-patterns, CF-large_monochromatic					
13	T2V001012_Eyewitness_news	CF-moving_text					

Selecting a drop-down menu and clicking on 'y' reduces the list to those that have that CF value:

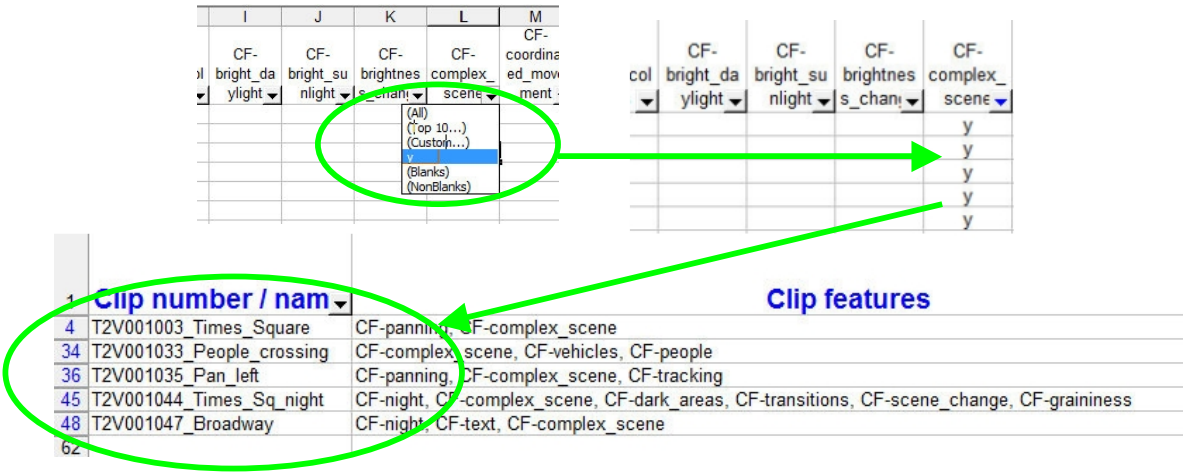

5.2.3 List of 'CF' ('clip features') words used

The PDF of the user manual may be searched to find clips that match the given CF-words ('CF'= Clip Feature).

CF-bright_sunlight	CF-bright_daylight	CF-sunrise_sunset
CF-dull_daylight	CF-brightness_change	CF-shaded
CF-indoors_bright	CF-indoors_dark	CF-night
CF-twilight	CF-light_picture	CF-dark_picture
CF-high_contrast		
CF-people	CF-vehicles	CF-water
CF-buildings	CF-faces	CF-text
CF-trees	CF-leaves_grass	CF-clouds
CF-sky	CF-sports	
CF-patterns	CF-reflections	CF-round_objects
CF-graininess	CF-out_of_focus	CF-large_monochromatic
CF-bright_colours	CF-dull_colours	
CF-movement_in	CF-movement_out	CF-movement_up/down
CF-movement_across	CF-random_movement	CF-diagonal_movement
CF-fast_track_pan	CF-panning	CF-scroll
CF-tracking	CF-tracking_following	CF-jerky
CF-transition	CF-fade	
CF-zoom_in	CF-zoom_out	
CF-angled	CF-subjects_behind_foreground	
CF-sound_vehicles	CF-sound_talking	CF-sound_water
CF-sound_other	CF-wind	CF-music

6. Detailed information on individual clips

The following pages provide detailed information on the clips in this set.

6.1 Detailed description of each clip

This section contains detailed descriptions of each video clip, and the associated audio.

70 features are listed for each clip: the purpose of providing these descriptions is to make it easier to select specific clips for specific features.

Therefore even if a characteristic does occur in a particular clip, this is not necessarily listed where it is not a prominent feature and/or where it is believed that the clip would not be selected for this particular feature.

Clearly to some extent these descriptions and selections are subjective, and the user is likely to come to their own conclusions as to which are most relevant to their particular codec / situation: the descriptions provided are intended to be an appropriate starting point.

01_Silver_dome

GN.01	Filename(s)	T2V013n01_Silver_dome_<xsize>x<ysize><f>rr_<d>b_P<chr>.yuv
GN.02	Horizontal x vertical sizes	1920x1080p60 10-bit 4:2:2 ; 1920x1080p60 8-bit 4:2:0 ; 1920x1080i30 10-bit 4:2:2 ; 1920x1080i30 8-bit 4:2:0 ; 1280x720p60 8-bit 4:2:0 ; 1280x720p30 8-bit 4:2:0 ; NTSC (720x480i30 8-bit 4:2:0)
GN.03	Progressive / Interlaced	<f> in filename: 'p' = progressive; 'i' = interlaced
GN.04	Video format	YUV planar 4:2:2 or 4:2:0
GN.05	Bits per sample	10 or 8 (for each of Y, U, V)
GN.06	Video description	Silver dome in background, with metal waterfall and people walking to and fro
GN.07	Principal purposes	Codec efficiency in scene with static background but with water and reflections
GN.08	Duration (mins:secs:frames): '60p' at 59.94 fps; '30i' & '30p' at 29.97 fps	00:39:56 (60p), 00:39:28 (30i), 00:39:28 (30p)
GN.09	Number of frames	2394 (60p), 1197 (30i), 1197 (30p)
GN.10	File sizes on disk (MB) [same order as Horizontal x Vertical sizes]	19,856 : 7,446 : 9,928 : 3,723 : 3,309 : 1,655 : 621
GN.11	Original video format	1920x1080 progressive 59.94 fps
GN.12	CF-words	CF-buildings, CF-reflections, CF-people, CF-bright_sunlight, CF-movement_out, CF-music, CF-movement_in, CF-sound_water
GN.13	Associated audio types	MPEG1 Layer II 48kHz 16bit stereo 384kbps Constant Bit Rate : 16bit uncompressed 48kHz stereo WAV
GN.14	Associated audio filenames	T2a013x001_Silver_dome_act_MP1LII.mpa : T2a013y001_Silver_dome_act_unc.wav
GN.15	Associated audio description	Actual audio recorded with video
GN.16	Audio duration	Same as video (video played at 59.94fps)

	Clip features	Details
LIGHT CONDITIONS		
LC.01	Bright sunlight	All
LC.02	Bright daylight	-
LC.03	Dull daylight	-
LC.04	Shaded areas	-
LC.05	Indoors bright	-
LC.06	Indoors dark	-
LC.07	Twilight	-
LC.08	Sunrise/sunset	-
LC.09	Night	-
LC.10	Backlighting	-
LC.11	Large brightness change	-
SCENE SUBJECTS		
SS.01	People	Many
SS.02	Faces	Many
SS.03	Vehicles	-
SS.04	Buildings	Several
SS.05	Trees	-
SS.06	Text	-

SS.07	Talking head	-
SS.08	Water	Some
SS.09	Leaves/grass	-
SS.10	Sky	Blue w clouds
SS.11	Clouds	Few
SS.12	Patterns	Many
SS.13	Round/curved objects	One

SCENE PROPERTIES

SP.01	Depth of field	Deep
SP.02	Out-of-focus	-
SP.03	Fine lines/moiré patterns	-
SP.04	Reflections	Lots
SP.05	Scene change	-
SP.06	Fades	-
SP.07	Transitions	-
SP.08	Slow/fast motion	-

COLOURS & CONTRAST

CC.01	Light picture	-
CC.02	Dark picture	-
CC.03	Bright colours	Some
CC.04	Dull colours	-
CC.05	Fine detail/moiré patterns	-
CC.06	High contrast areas	Lots
CC.07	Large monochromatic areas	-
CC.08	Graininess	-
CC.09	Black background	-
CC.10	White background	-

GLOBAL MOTION

GM.01	Fast track/pan	-
GM.02	Tracking in/out	-
GM.03	Tracking	-
GM.04	Panning	-
GM.05	Tracking (following)	-
GM.06	Fast scroll	-
GM.07	Scroll	-
GM.08	Angled	-
GM.09	Zoom in	-
GM.10	Zoom out	-
GM.11	Hand-held camera	-

SUBJECT MOTION

SM.01	Movement out of picture	Lots, slow
SM.02	Movement into picture	Lots, slow
SM.03	Movement across picture	Some, slow
SM.04	Movement up/down	-
SM.05	Diagonal movement	-
SM.06	Subjects behind foreground objects	-
SM.07	Low movement	-

SOUND CONTENT

SC.01	Talking	Some
SC.02	Movement	-
SC.03	Vehicles	-
SC.04	Wind	-
SC.05	Music	-
SC.06	Background	People
SC.07	Other	Water

SOUND CHARACTERISTICS

SH.01	Mono/ stereo	Stereo
SH.02	Average volume	Mid
SH.03	Level changes	-
SH.04	Clear/ distorted	Clear

02_PedXing

GN.01	Filenames [see section 3.2.1 for key]	T2V013n02_PedXing_<xsize>x<ysize><f>rr_<d>b_P<chr>.yuv
GN.02	Horizontal x vertical sizes	1920x1080p60 10-bit 4:2:2 ; 1920x1080p60 8-bit 4:2:0 ; 1920x1080i30 10-bit 4:2:2 ; 1920x1080i30 8-bit 4:2:0 ; 1280x720p60 8-bit 4:2:0 ; 1280x720p30 8-bit 4:2:0 ; NTSC (720x480i30 8-bit 4:2:0)
GN.03	Progressive / Interlaced	<f> in filename: 'p' = progressive; 'i' = interlaced
GN.04	Video format	YUV planar 4:2:2 or 4:2:0
GN.05	Bits per sample	10 or 8 (for each of Y, U, V)
GN.06	Video description	Close (static) view of a pedestrian crossing with grand building in background
GN.07	Principal purposes	Codec efficiency with detailed static scene, objects (people) passing close and obscured
GN.08	Duration (mins:secs:frames): '60p' at 59.94 fps; '30i' & '30p' at 29.97 fps	00:34:42 (60p), 00:34:21 (30i), 00:34:21 (30p)
GN.09	Number of frames	2080 (60p), 1040 (30i), 1040 (30p)
GN.10	File sizes on disk (MB) [same order as Horizontal x Vertical sizes]	17,252 : 6,470 : 8,626 : 3,235 : 2,875 : 1,438 : 539
GN.11	Original video format	1920x1080 progressive 59.94 fps
GN.12	CF-words	CF-buildings, CF-people, CF-vehicles, CF-bright_sunlight, CF-shaded, CF-text, CF-sound_vehicles, CF-movement_in, CF-diagonal_movement, CF-wind
GN.13	Associated audio types	MPEG1 Layer II 48kHz 16bit stereo 384kbps Constant Bit Rate : 16bit uncompressed 48kHz stereo WAV
GN.14	Associated audio filenames	T2a013x002_PedXing_act_MP1LII.mpa : T2a013y002_PedXing_act_unc.wav
GN.15	Associated audio description	Actual audio recorded with video
GN.16	Audio duration	Same as video (video played at 59.94fps)

	Clip features	Details
LIGHT CONDITIONS		
LC.01	Bright sunlight	Most
LC.02	Bright daylight	-
LC.03	Dull daylight	-
LC.04	Shaded areas	Some
LC.05	Indoors bright	-
LC.06	Indoors dark	-
LC.07	Twilight	-
LC.08	Sunrise/sunset	-
LC.09	Night	-
LC.10	Backlighting	-
LC.11	Large brightness change	-
SCENE SUBJECTS		
SS.01	People	Several
SS.02	Faces	Many

SS.03	Vehicles	Mixed traffic
SS.04	Buildings	Several
SS.05	Trees	-
SS.06	Text	Some
SS.07	Talking head	-
SS.08	Water	-
SS.09	Leaves/grass	-
SS.10	Sky	-
SS.11	Clouds	-
SS.12	Patterns	Many
SS.13	Round/curved objects	-

SCENE PROPERTIES

SP.01	Depth of field	Deep
SP.02	Out-of-focus	-
SP.03	Fine lines / moiré patterns	-
SP.04	Reflections	-
SP.05	Scene change	-
SP.06	Fades	-
SP.07	Transitions	-
SP.08	Slow/fast motion	-

COLOURS & CONTRAST

CC.01	Light picture	-
CC.02	Dark picture	-
CC.03	Bright colours	Some
CC.04	Dull colours	-
CC.05	Fine detail/moiré patterns	-
CC.06	High contrast areas	-
CC.07	Large monochromatic areas	-
CC.08	Graininess	-
CC.09	Black background	-
CC.10	White background	-

GLOBAL MOTION

GM.01	Fast track/pan	-
GM.02	Tracking in/out	-
GM.03	Tracking	-
GM.04	Panning	-
GM.05	Tracking (following)	-
GM.06	Fast scroll	-
GM.07	Scroll	-
GM.08	Angled	-
GM.09	Zoom in	-
GM.10	Zoom out	-
GM.11	Hand-held camera	-

SUBJECT MOTION

SM.01	Movement out of picture	Some, slow
SM.02	Movement into picture	Some, fast
SM.03	Movement across picture	Some, slow
SM.04	Movement up/down	-
SM.05	Diagonal movement	Lots, fast
SM.06	Subjects behind foreground objects	Few
SM.07	Low movement	-

SOUND CONTENT

SC.01	Talking	-
SC.02	Movement	-
SC.03	Vehicles	Traffic
SC.04	Wind	Some
SC.05	Music	-
SC.06	Background	People
SC.07	Other	-

SOUND CHARACTERISTICS

SH.01	Mono/ stereo	Stereo
SH.02	Average volume	V. loud
SH.03	Level changes	-
SH.04	Clear/ distorted	Clear